GARLAND

Master Series Heavy-Duty Griddle Top Range

Project _____

Item _____

Quantity _____

CSI Section 11400

Approved _____

Date _____

Models

- M47R
- M47S
- M47T



Model M47R
Shown with Optional
Backguard

Standard Features

- Stainless steel front and sides
- 6" (152mm) chromed steel adj. legs
- 7-1/2" (191mm) stainless steel front rail
- 1" (25mm) thick steel griddle plate
- 2-5/16" (591mm) high welded steel splash guard,, sides and back
- Removable front-mounted stainless steel grease receptacle
- Hi-Lo valve control for each griddle burner
- Three "H" griddle burners 99,000 BTU (29 kW) total
- Piezo spark ignition for oven
- Fully porcelainized oven interior
- Storage base interior of aluminized steel w/shelf, (Suffix S)
- Modular top section, (Suffix T)
- 40,000 BTU (11.72kW) natural gas, 35,000 (10.25 kW) propane gas cast-iron oven burner

Options & Accessories

- Stainless steel common front rail up to 102" (2591mm) wide (two or more units in a battery)
- Stainless steel main back
- Fully grooved griddle (or grooved sections)
- Stainless steel oven interior
- Convection oven base, add C to Model No., e.g. M47RC
- Additional oven rack
- Rear gas connection, 3/4" or 1" NPT
- Gas regulator 3/4" or 1-1/4"
- Gas shut off valve; 3/4", 1" or 1-1/4" NPT
- Gas flex hose & quick disconnect (3/4", 1" or 1-1/4" NPT x 5') w/ restraining device, please specify
- End caps and cover, (NC) - specify
- Set of 4 Polyurethane non-marking swivel casters w/front brakes
- 6" (152mm) stainless steel adj. legs
- Dais base (not for use with "RC" oven)
- Storage base shelf of aluminized or stainless steel
- Stainless steel tubular high shelf, single or double deck
- Stainless steel backguard: 10" (354mm), 17" (432mm) or 33" (838mm)
- 230 volt, 50 cycle components, RC motor (export)
- Celsius dial for oven thermostat, NC

Specifications

Heavy-duty gas range with oven, Model M47R. One 34" (864mm) wide, valve-controlled griddle. 1" (25mm) thick, 99,000 BTU (29 kW) total. 34" (864mm) wide x 38" (965mm) deep, including 7-1/2" (191mm) deep stainless steel front rail. Porcelain enamel oven interior measuring 26-1/4" (667mm) wide x 13-1/2" (343mm) high x 29" (737mm) deep. 40,000 BTU (11.72 kW) cast-iron burner. Stainless steel front and sides. 139,000 BTU (40.73 kW) total. Natural or propane gas. Also Available with storage base(s) w/doors, suffix S, and Modular top, suffix T.

NOTE: Ranges suppled with casters must be installed with an approved restraining device.

NOTE: All Master Series ranges, attachments, fryers, and broilers require a high shelf or backguard flue attachment - sold separately.

Master Series Heavy-Duty Griddle Top Range

Garland Commercial Ranges Ltd.
1177 Kamato Road,
Mississauga, Ontario
L4W 1X4 CANADA

General Inquires 1-905-624-0260
USA Sales, Parts and Service 1-800-424-2411
Canadian Sales 1-888-442-7526
Canada or USA Parts/Service 1-800-427-6668

www.garland-group.com
6900C
11/25

WELBILT
an Ali Group Company

GARLAND

Master Series Heavy-Duty Griddle Top Range

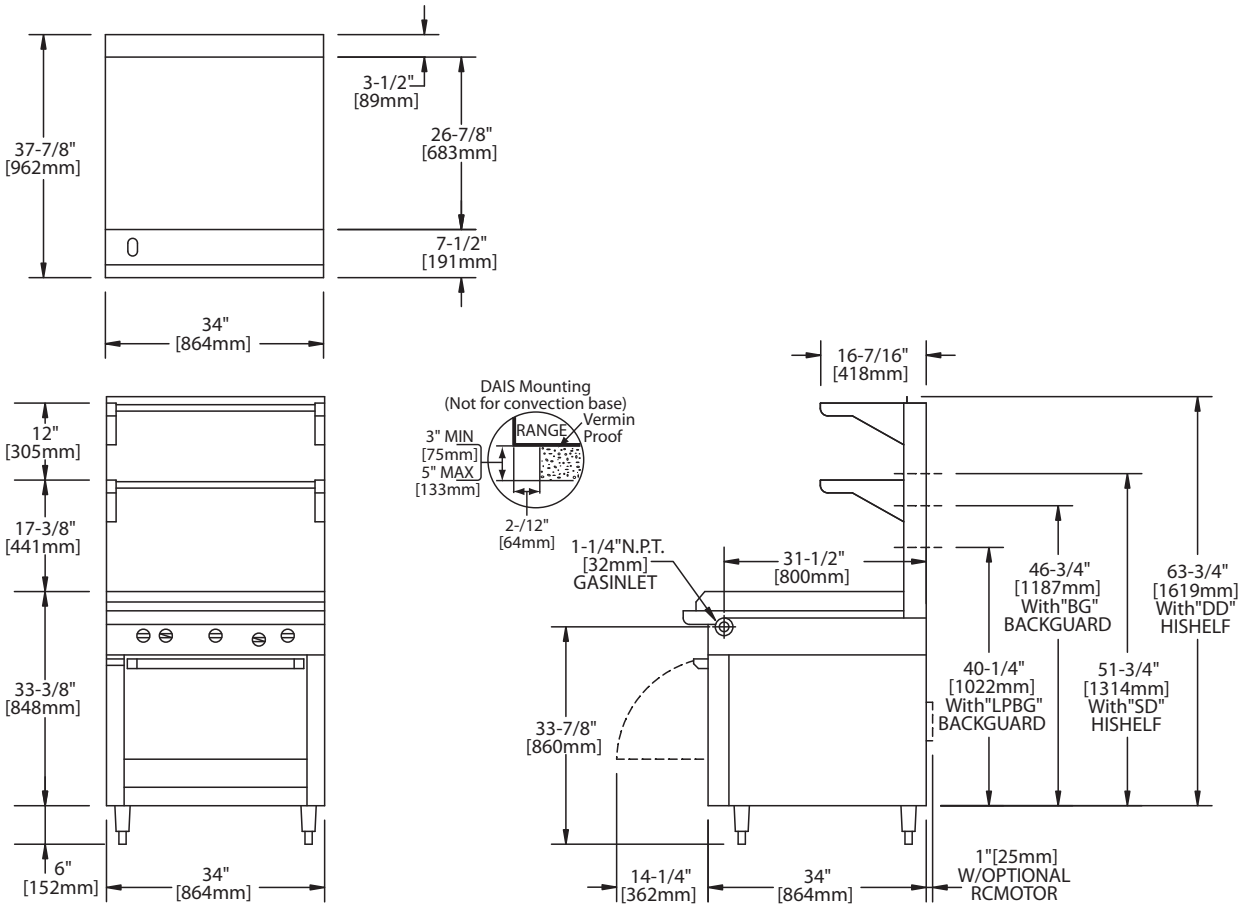

Product	Width: In(mm)	Depth: In(mm)	Height: In(mm) (w/ NSF Legs)	Height: In(mm) (w/o NSF Legs)	Oven/Storage Base Interior: in(mm)		
					Width	Depth	Height
M47R	34(864)	38(965)	36-3/8(924)	30-3/8(772)	26-1/4(667)	29(737)**	13-1/2(343)
M47S	34(864)	38(965)	36-3/8(924)	36-3/8(924)	26(665)	30-1/2(773)	20-1/2(519)
M47T	34(864)	38(965)	36-3/8(924) w/stand	9-1/2 (241) w/o stand*	N/A	N/A	N/A

*Modular top has 1-1/2" seating flanges. **RC oven is 25" (635mm) deep.

INPUT-BTU/hr (Natural Gas)	M47R & M47RC	M47S & M47T
Top Section	99,000 (29.00kW)	99,000 (29.00kW)
Oven***	40,000 (11.72kW)	N/A
TOTAL	139,000 (40.72kW)	99,000 (29.00kW)

RC=Range w/Convection Oven R=Range w/Oven S=Range w/Storage Base T=Modular Top

*** Oven rated 35,000BTU (10.25kW) for Propane Gas

INSTALLATION NOTES			Shipping Wt: (Lb/Kg)
Combustible Wall Clearances [1]	Entry Clearances	Operating Pressure	M47R 600/273 M47S 500/227 M47T 410/186
Sides: 14" (356mm) Back: 6" (152mm)	Crated: 39-1/4" (997mm) Uncrated: 34-1/4" (870mm)	Natural: 6" WC (15mbar) Propane: 10" WC (25mbar)	

[1]NOTE: Installation clearance reductions are applicable only where local codes permit.

[2]Shipping Cubic Feet 50 for R & S Models, 20 for T models

Data applies only to North America

Gas input ratings shown here are for installations up to 2,000 ft. (610m) above sea level. Specify altitudes over 2,000 ft.
Electrical characteristics each RC oven: 1/3 HP motor, 120 VAC, single phase, 3.4 amps, 6 ft. (1.8m) power cord with NEMA 5-15P plug provided.
230 VAC export is direct connect, single phase, 50 Hz. Please specify gas type when ordering.

Garland reserves the right to make changes to the design or specifications without prior notice.

Garland Commercial Ranges Ltd.
1177 Kamato Road,
Mississauga, Ontario
L4W 1X4 CANADA

General Inquires 1-905-624-0260
USA Sales, Parts and Service 1-800-424-2411
Canadian Sales 1-888-442-7526
Canada or USA Parts/Service 1-800-427-6668

www.garland-group.com
6900C
11/25

WELBILT
an Ali Group Company